energy consumption in buildings

assessing the performance of buildings and components

Michiel Cohen, cepezed architects

CSTB: VERS DES BÂTIMENTS À ÉNERGIE POSITIVE

Thursday the 28th of September, Paris, France

cepezed

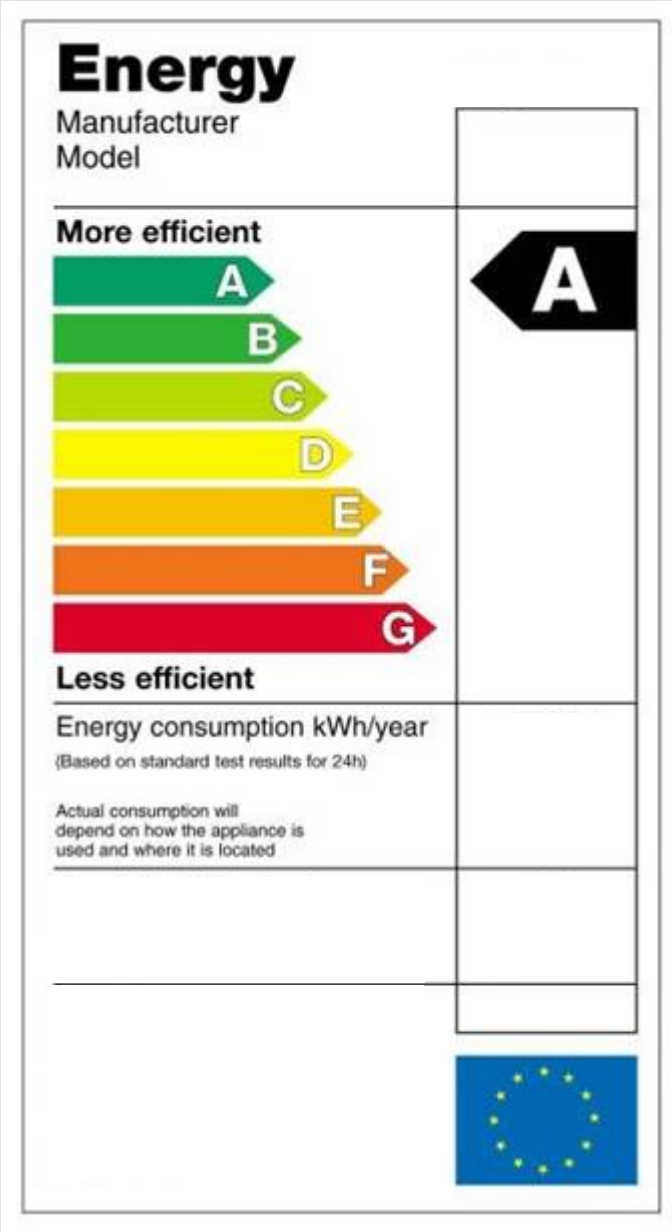

EPBD implementation: identical assessment of performance

EU's call for energy reduction resulted in the introduction of the Energy Performance Building Directive (EPBD)

This causes the following problems:

1. A EPBD derived measure is an obligatory energy label for all new buildings in EU countries.

This makes a realistic *comparison between countries* and the *equalizing of regulations* necessary.

2. A side effect is that *Europe* is becoming a major market for energy reducing building components.

Before such a component is introduced, it's effectivity must be determined for every country in an identical manner.

This comprehends the introduction of a thorough *analysis protocol* for these components.

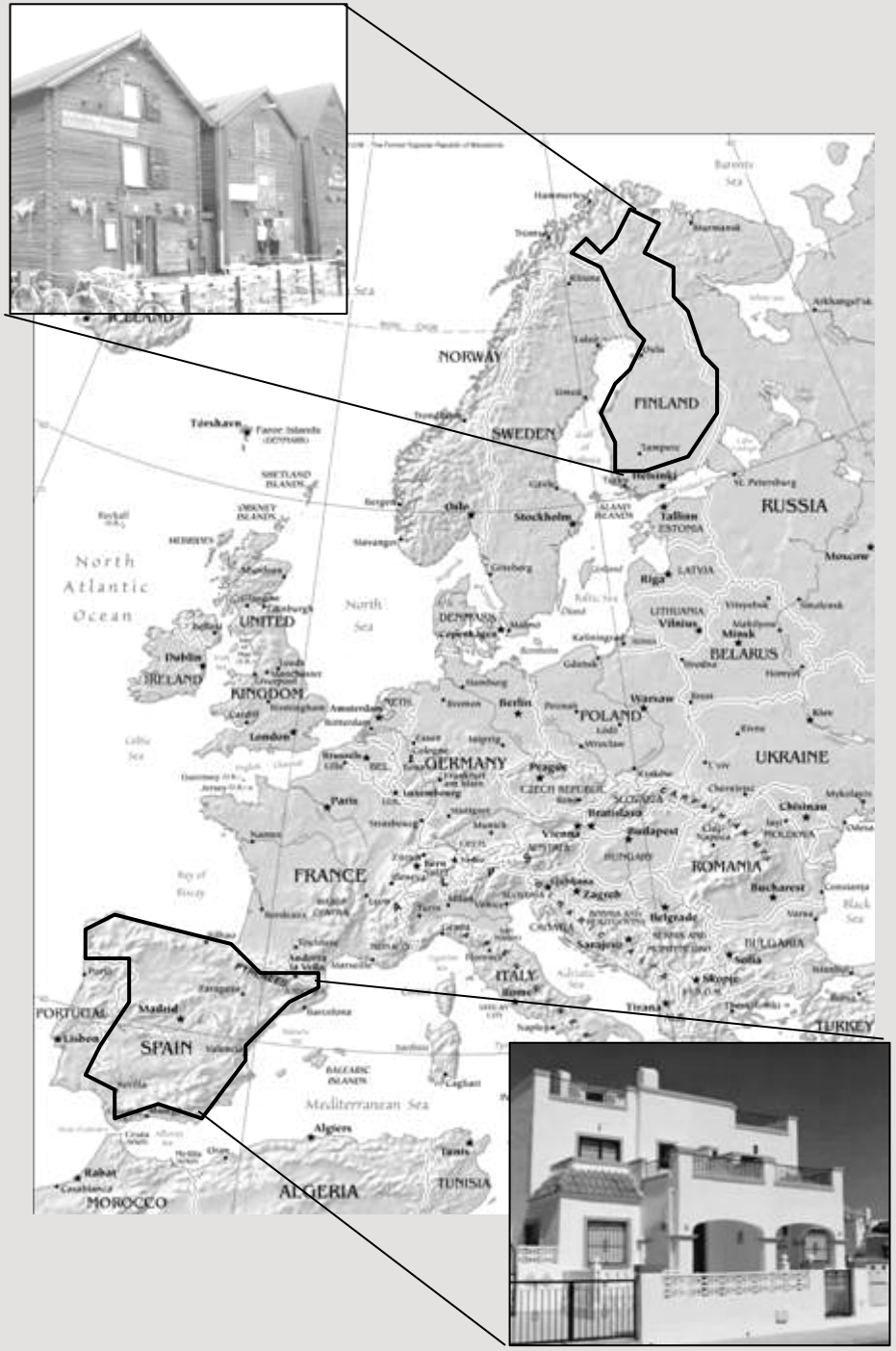

Comparison of buildings: energy consumption and building types in Europe

When identifying European building types for calculation purposes a problem occurs.

In Europe there is a large variety in:

- phenotypes ('physical expression, outward appearance')
- climatic zones
- use of building materials
- building regulations
- use of buildings (e.g. time, occupation)

Therefore an 'average' European building (type) *cannot* be identified.

The use of a *reference cell* can be the solution to this problem.

cepezed

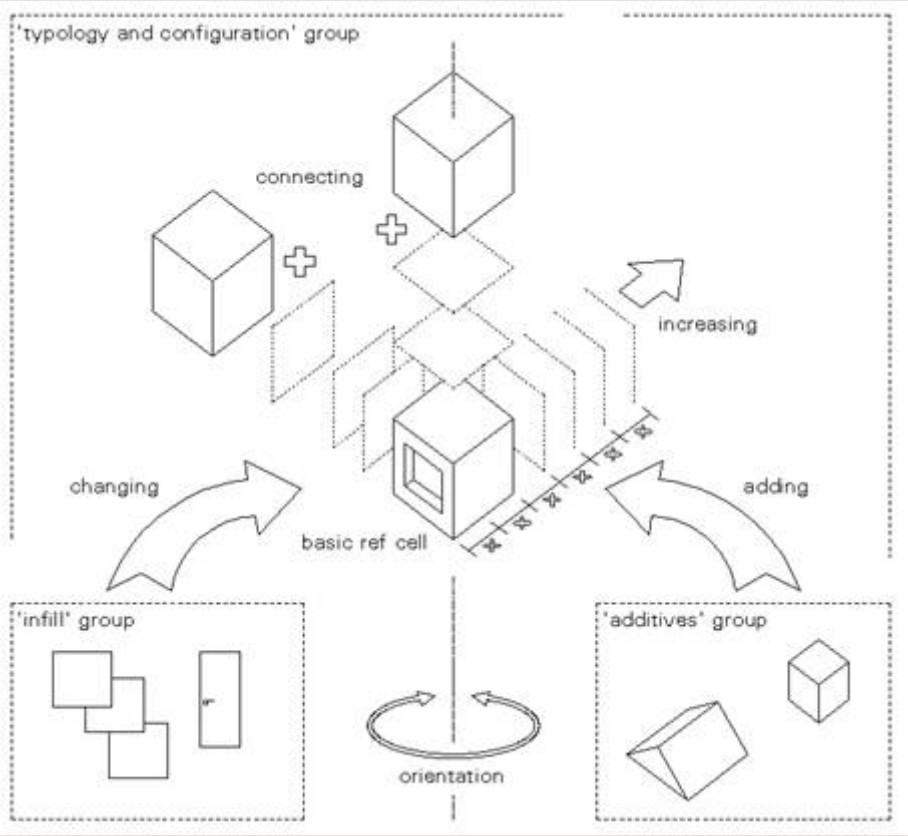

Comparison: the use of a reference cell

Using a reference cell to calculate energy consumption is more realistic and has the following advantages:

- easy comparison with other types of buildings
- easy comparison between EU countries
- high adaptability: volume, orientation, layouts etc.
- influence of *climate* is visible
- influence of *energy reducing building components* is instantly visible
- it can be used as an *index* and adjusted regularly
- it can be used as 'political measure' when applying the Energy Performance Building Directive (EPBD and prEN 15203)

Each country can adapt the cell to its own conditions but the basics remain the same.

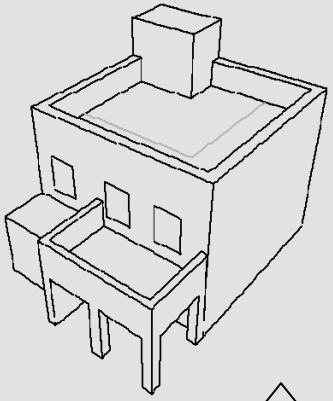

Spanish house

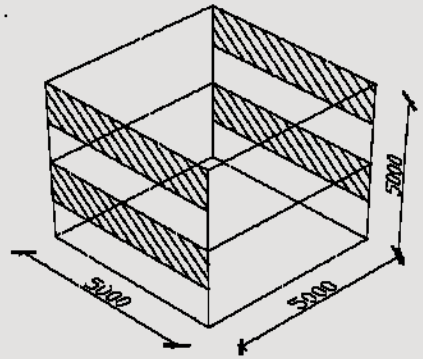

basic reference cell

Finnish house

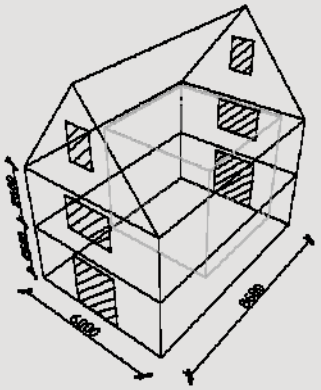

The use of a reference cell

The outcome of the reference cell calculations can be used for *comparison* with other European countries.

The results of the calculation can be used to determine the effectiveness of a energy reducing building component.

Also the index derived from calculations can act as a part of the '*building energy certificate' or energy label* (e.g. prEN 15203).

Differences in outcome between various *simulation software* can be determined when using a reference cell.

NETHERLANDS

DETAILS	# of citizens (1)	1,61E+07	persons
	dwellings (1)	6,71E+06	#
	# of persons/dwelling	2,40	persons/dwelling
	avg dwelling size	110,12	m2
	avg energy consumption	5,81E+04	MJ/yr
	climate zone (2)	sea climate	
ENERGY (3)*	kiloWatts per hour	147	kWh/yr/m2
	Oil Equivalents, tonnes	13	OE/yr/m2
	Natural Gas Equivalents, m3	17	NGE/yr/m2
	megaJoules	528	MJ/yr/m2
REFERENCE CELL	length	5,00	m1
	breadth	5,00	m1
	area	50,00	m2
	floor height	2,50	m1
	# of floors	2	#
	heated volume	62,50	m3
	total façade surface	50,00	m2
	façade type	traditional	
	transparent/opaque	to be determined	
	buildingmethod	traditional	
	buildingtype	to be determined	
	total energy cons.	2,64E+04	MJ/yr
VARIABLES/INPUT	length	8,00	m1
	breadth	6,00	m1
	area	96,00	m2
	floor height	2,60	m1
	# of floors	2	#
	heated volume	124,80	m3
	total façade surface	62,40	m2
	façade type	traditional	
	transparent/opaque	to be determined	
	buildingmethod	traditional	
	buildingtype	to be determined	
ENERGY USE/OUTPUT	total energy cons.	5,07E+04	MJ/yr
	energy/volume	4,06E+02	MJ/yr/m3
INFOMATION SOURCES	*(1) Housing statistics 2004 ODPM, UK*		
	(2) Köppen climate system		
	(3) NOVEM publication; Reference buildings (average energy consumption)		
	* includes energy used for heating water		

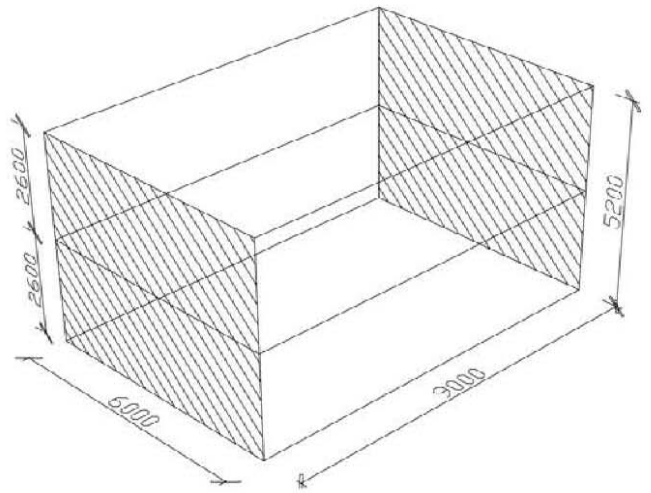

model

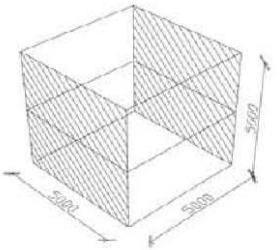

reference cell

configuration : reference — *energy consumption of this configuration*

1,92 — **5,07E+04 MJ/year**

reference cell calculation sheet with energy index

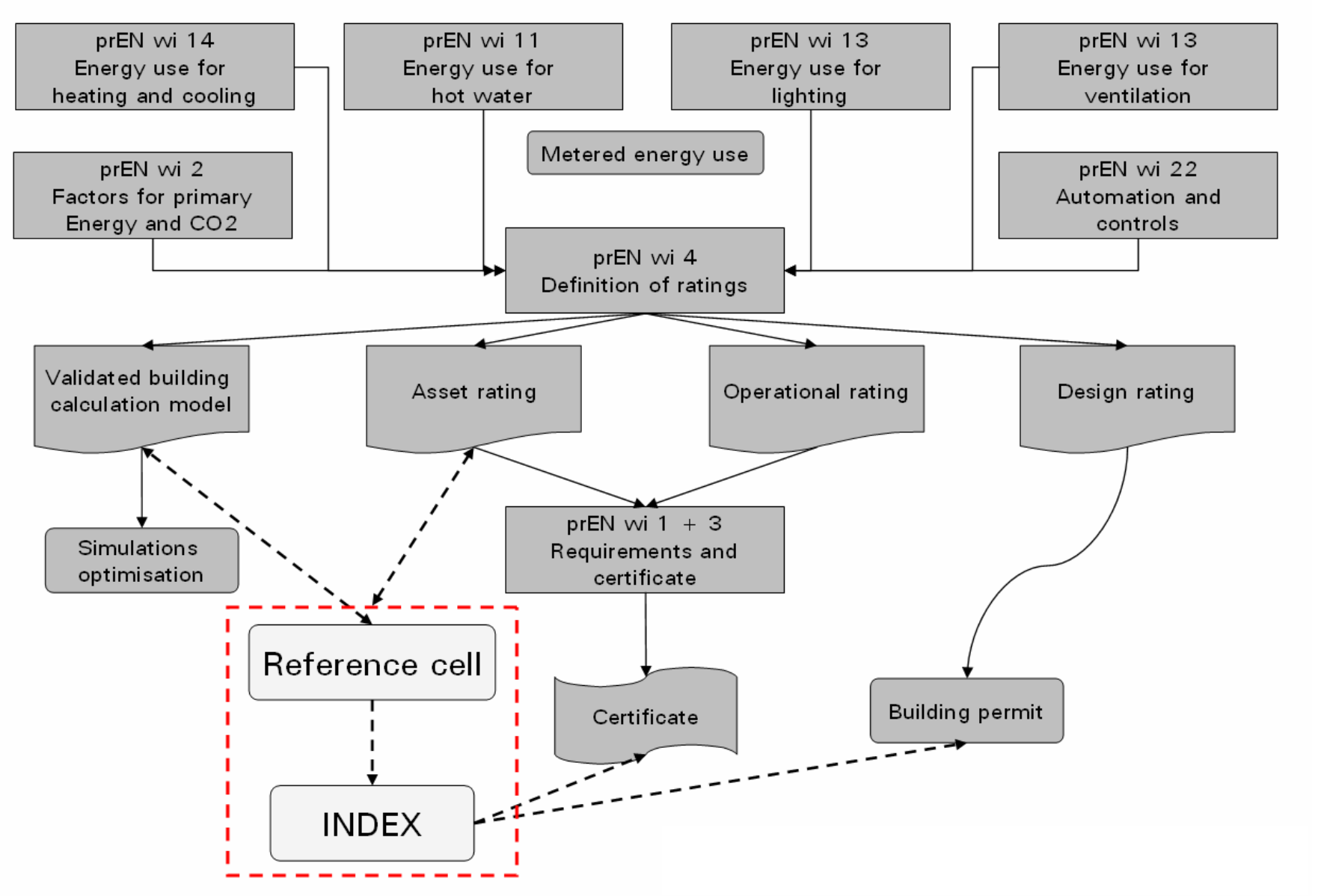

reference cell interaction with prEN 15203

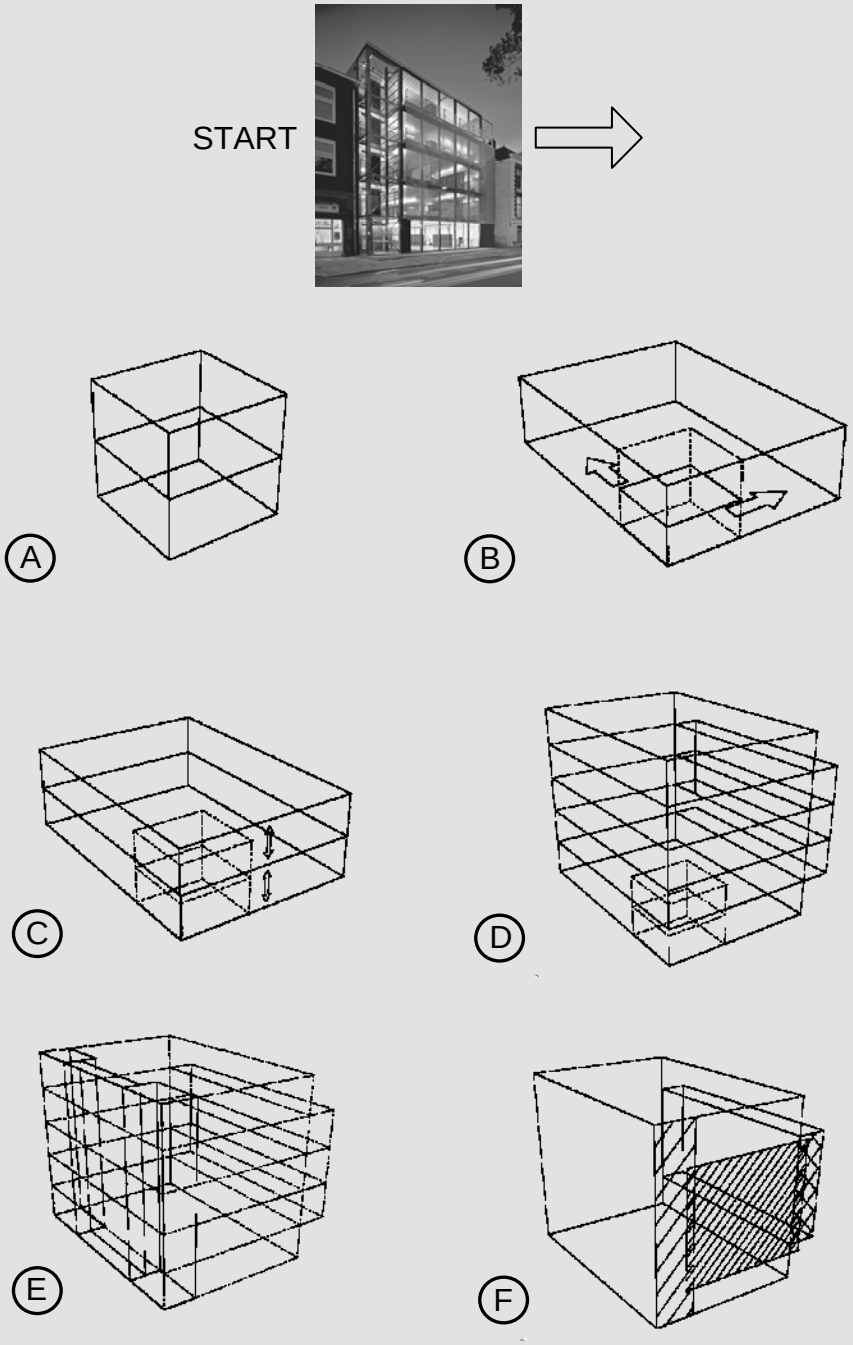

The use of a reference cell

The reference cell can be adapted to every situation:

In this instance the cepezed office is taken as an example:

A: basic cell

B: adjustment of floor plan

C: adjustment of floor height

D: add floors

E: define climatic zones

F: define façade types

cepezed

world energy consumption by fuel type 1970 - 2020

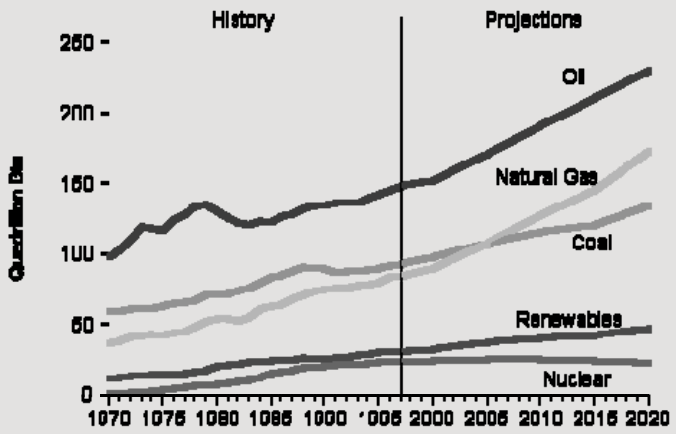

Source: EIA, International Energy Outlook 2000

energy use for space heating in houses by type and age

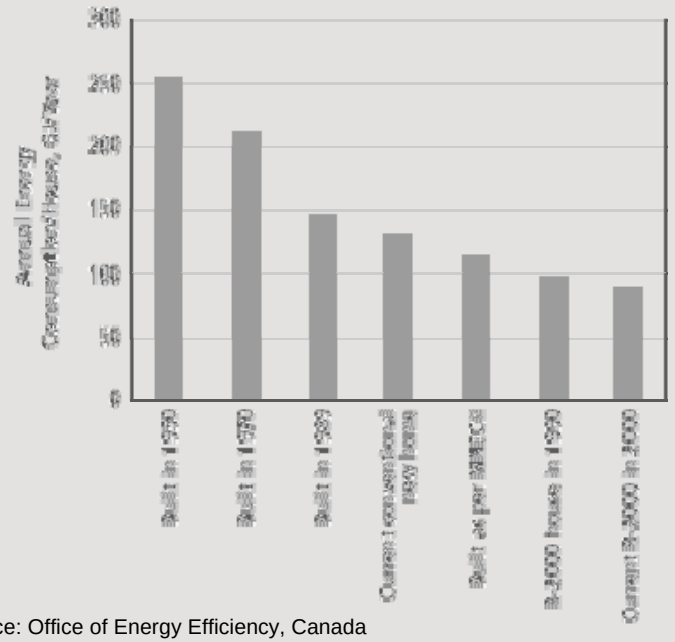

Source: Office of Energy Efficiency, Canada

Component analysis: energy demand of buildings

The use of energy in the world is still heavily increasing while the demand for heating energy in homes dropped dramatically since the 50's.

This has the following major reasons:

•Homes have become better insulated, especially because of the introduction of insulating glass

•Air tightness of the building envelope is improved

•The efficiency of heating devices is enlarged

cepezed

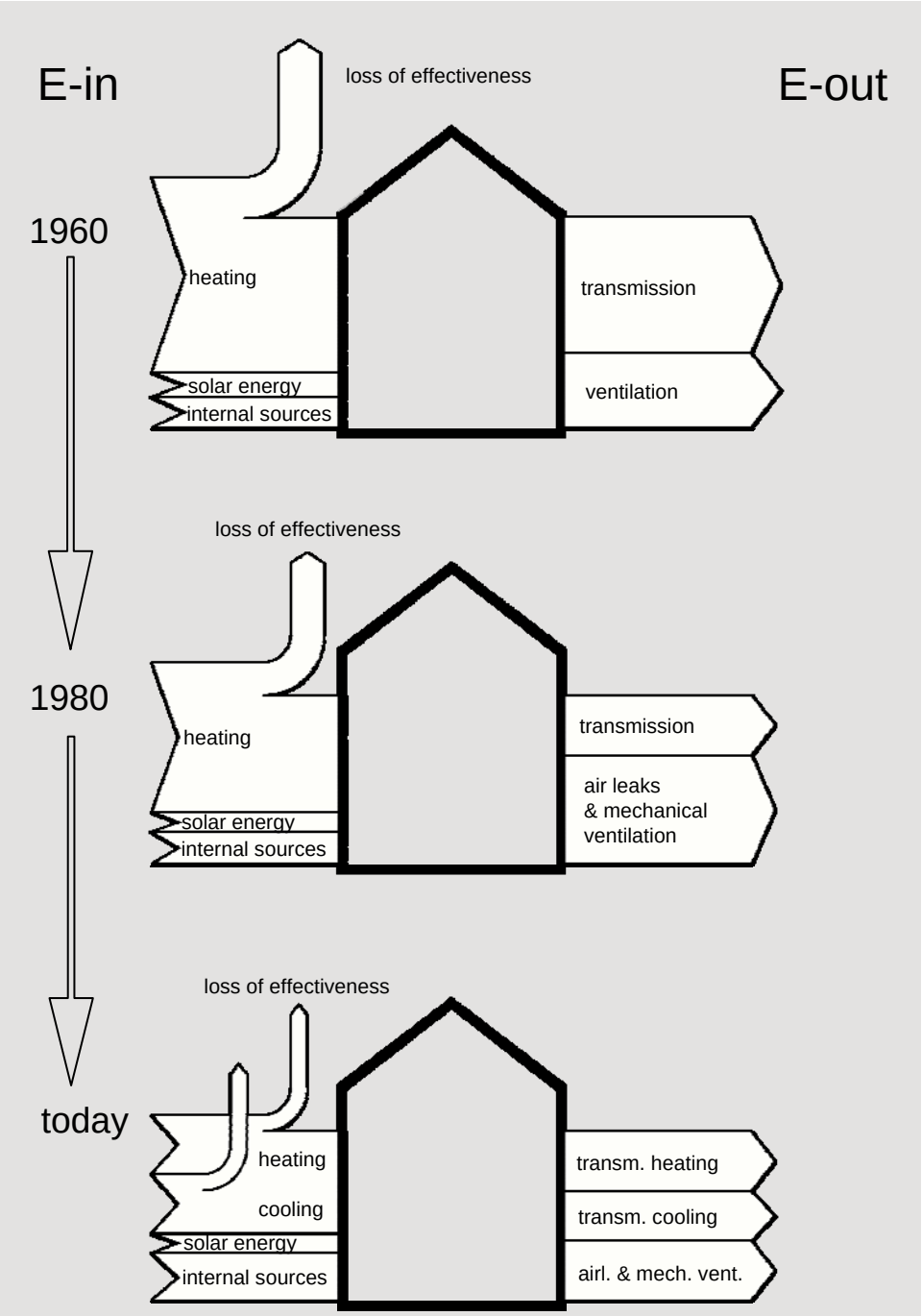

energy flows in residential buildings (except energy for hot water)

Component analysis: change in proportional use of energy

The measures that caused the drop in the demand for heating energy resulted in the change of proportional use of that energy:

1960 to 1980

Improved insulation and the use of insulating glass resulted in *lower* transmission rates but relatively *higher* ventilation losses.

1980 to today

More electrical home equipment (heat sources) combined with a higher air-tightness of the building envelope introduced the problem of *cooling*.

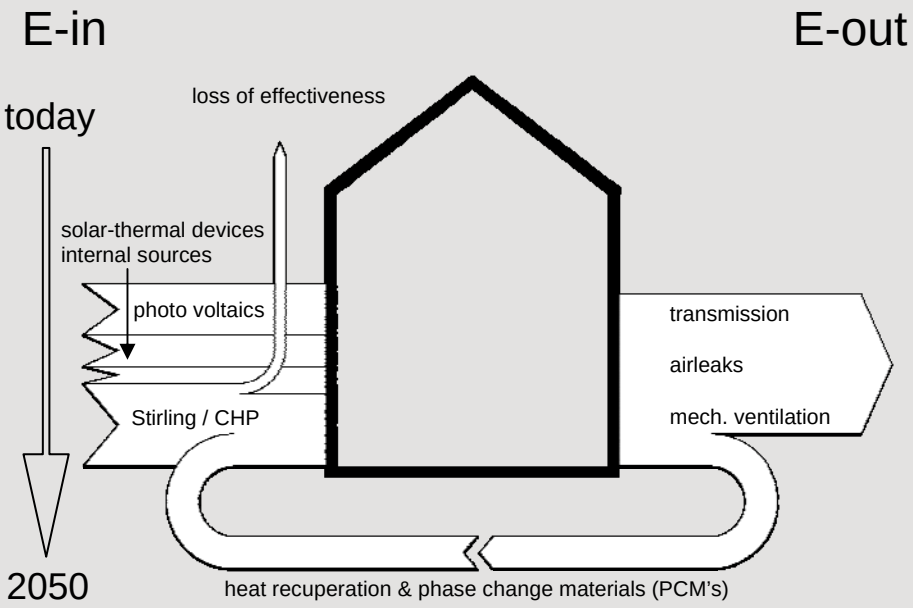

Proportional use of energy in the future

In the nearby future energy in the form of electricity and heat will increasingly be derived from:

- Combined Heat and Power units (CHP/Stirling engines)
- Photovoltaic panels (electricity)
- Thermal Solar solutions (hot water / hot air)

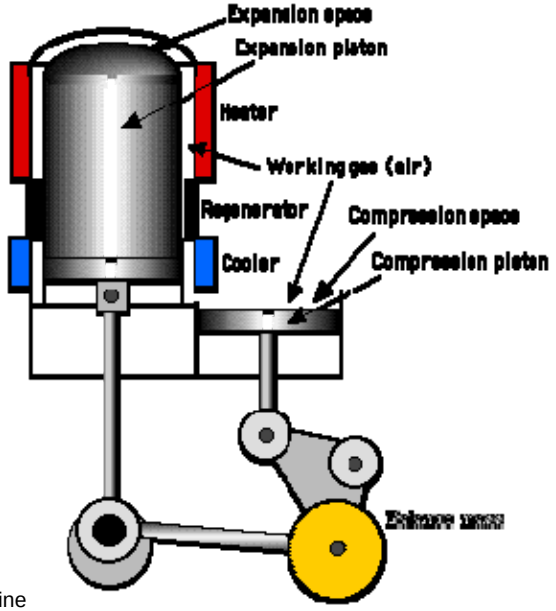

Stirling engine

cepezed

Lightweight construction: Floor/Deck system

The Floor/Deck system is applied in the lightweight steel office of cepezed architects in Delft. The energy consumption of the building is only 90 kWh/m^2/year, which is almost 50% of the average energy use.

The system contributes to this low energy use and has the following advantages:

- extremely lightweight
- only 300 mm thick, including ceiling finishing
- the hollow spaces double as an air plenum
- internal distribution of data and electricity cables
- fully meets fire prevention and noise insulation requirements.

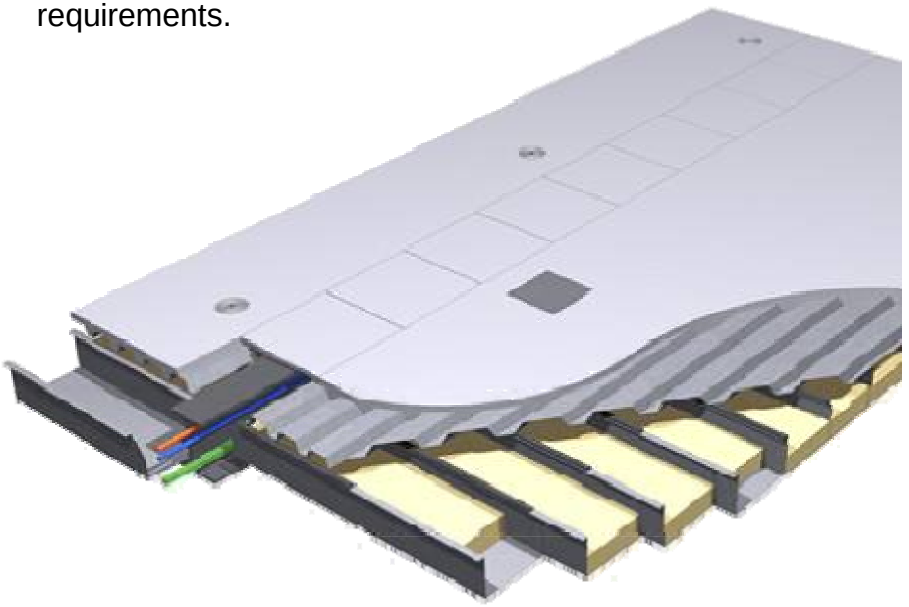

cepezed

Centre for Human Drug Research. Leiden, The Netherlands (cepezed)

Westraven. Utrecht, The Netherlands (cepezed)

Second skin façade : perforated screens

Perforated metal screens or coated and woven glass fiber screens used as a second skin on a building façade have the following advantages:

- reduction of wind load on façade
- reduction of heat transmission
- regulation of light transmission
- possibility to open windows at high altitudes

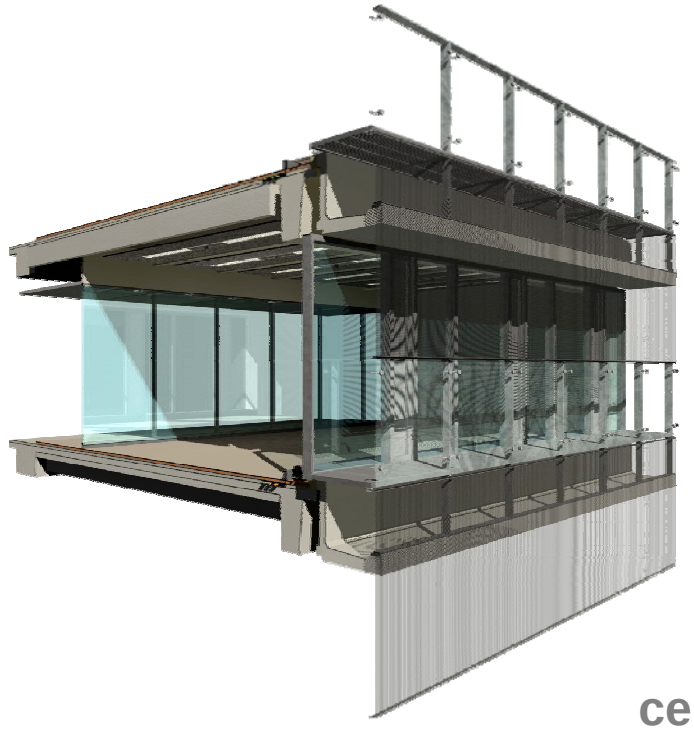

cepezed


ronic





cepezed
WUBBE



POST

Microsoft
Microsoft


METROPOLIS

PORSCHE

ANKER DRUKKERS